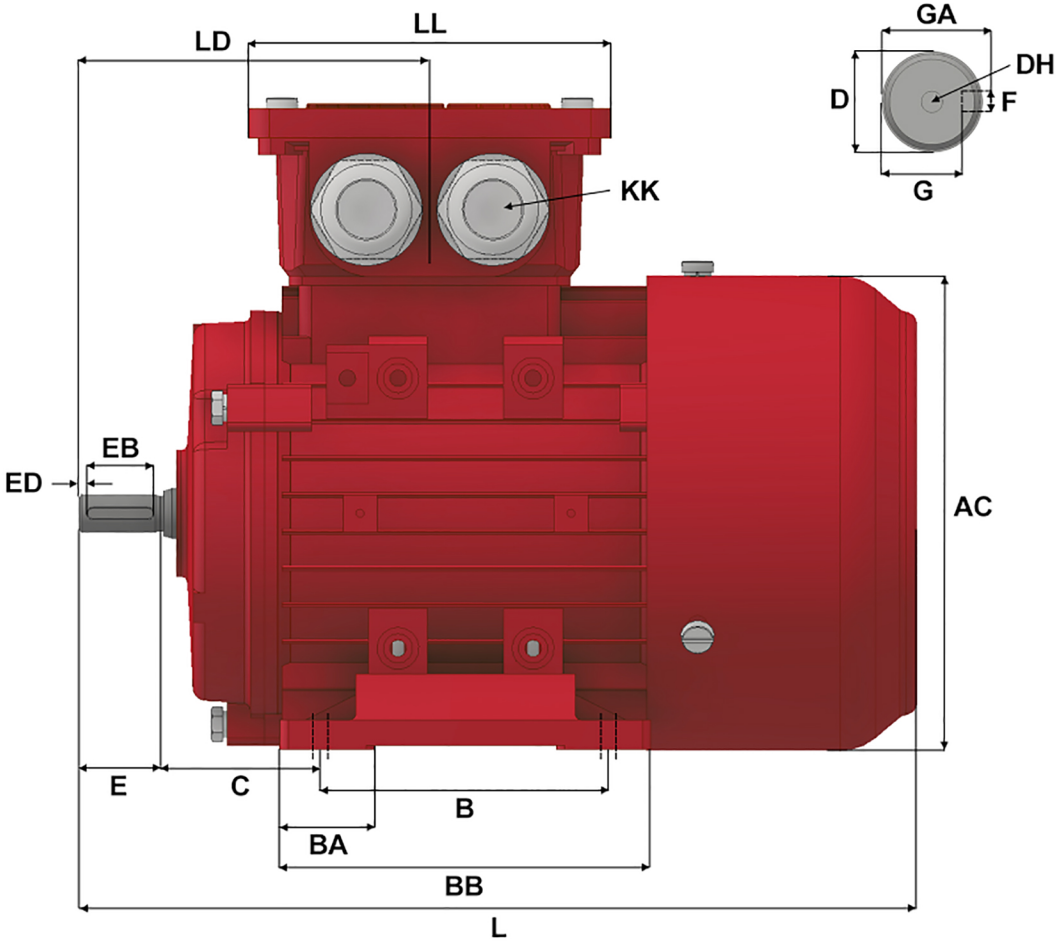

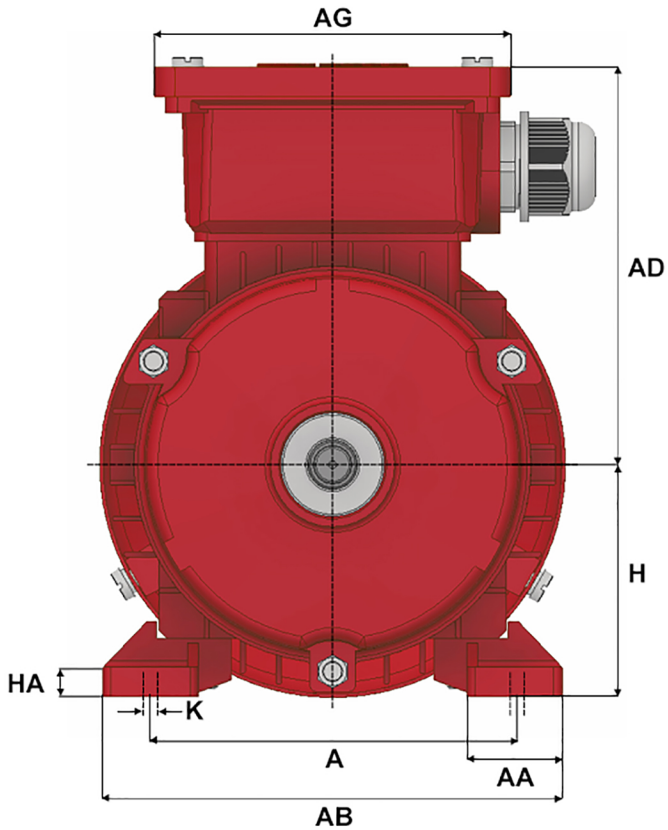

Version: 1JLEM	Revised: 22-06-2022	HP	RPM	FRAME	ENCLOSURE	IJA803-2-IE1-B3
Customer is responsible in determining that Max Motion product will fit/perform suitably in the intended application		2	3470	80	TEFC	

A	B	C	D	E	F	G	H	K	L	AA	AB	AC
125	100	50	19	40	6	15,5	80	10 X 14	286	35	157	155
AD	**AG**	**BA**	**BB**	**DH**	**EB**	**ED**	**GA**	**HA**	**KK (1)**	**KK (2)**	**KK (3)**	**LD**
125	101	31,5	125	M6 X 16	30	5	21,5	9	M20 X 1.5	1/2'' NPT	-	118
LL												
101												